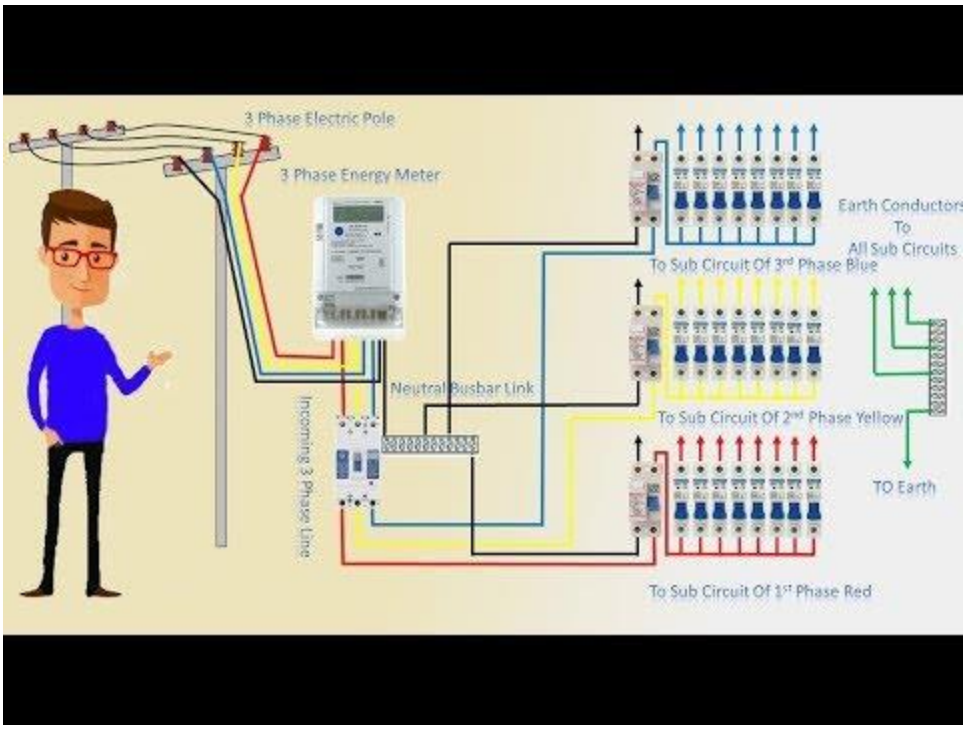
3 Phase Electric Pole
3 Phase Energy Meter
Earth Conductors
To
All Sub Circuits
To Sub Circuit Of 3rd Phase Blue
Neutral Busbar Link
To Sub Circuit Of 2nd Phase Yellow
Incoming 3 Phase Line
TO Earth
To Sub Circuit Of 1st Phase Red

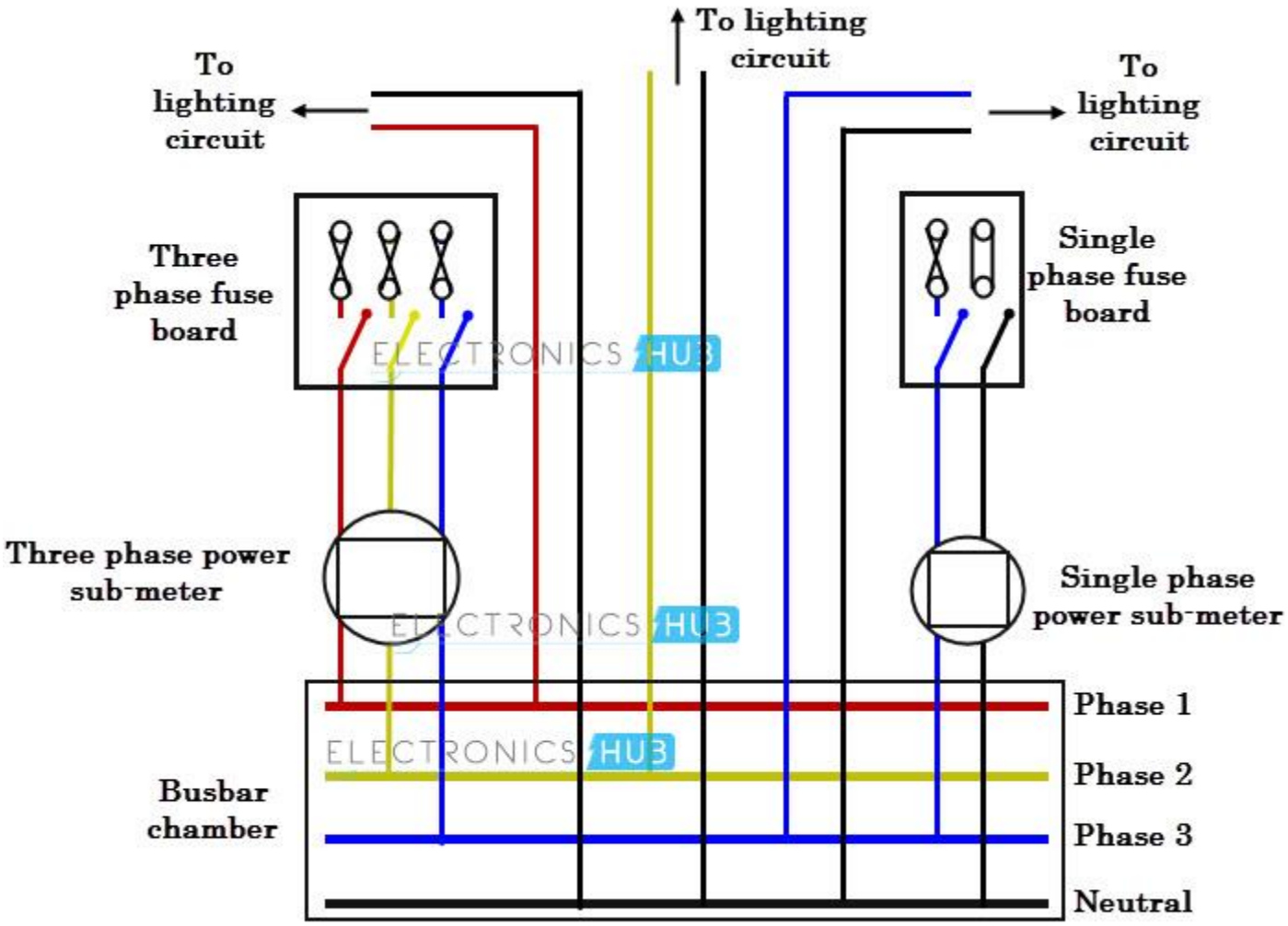
To lighting circuit
To lighting circuit
To lighting circuit
Three phase fuse board
Single phase fuse board
Three phase power sub-meter
Single phase power sub-meter
Busbar chamber
Phase 1
Phase 2
Phase 3
Neutral
ELECTRONICS HUB

How to Connect 1-Phase & 3-Phase Loads in a 3-Phase Wiring

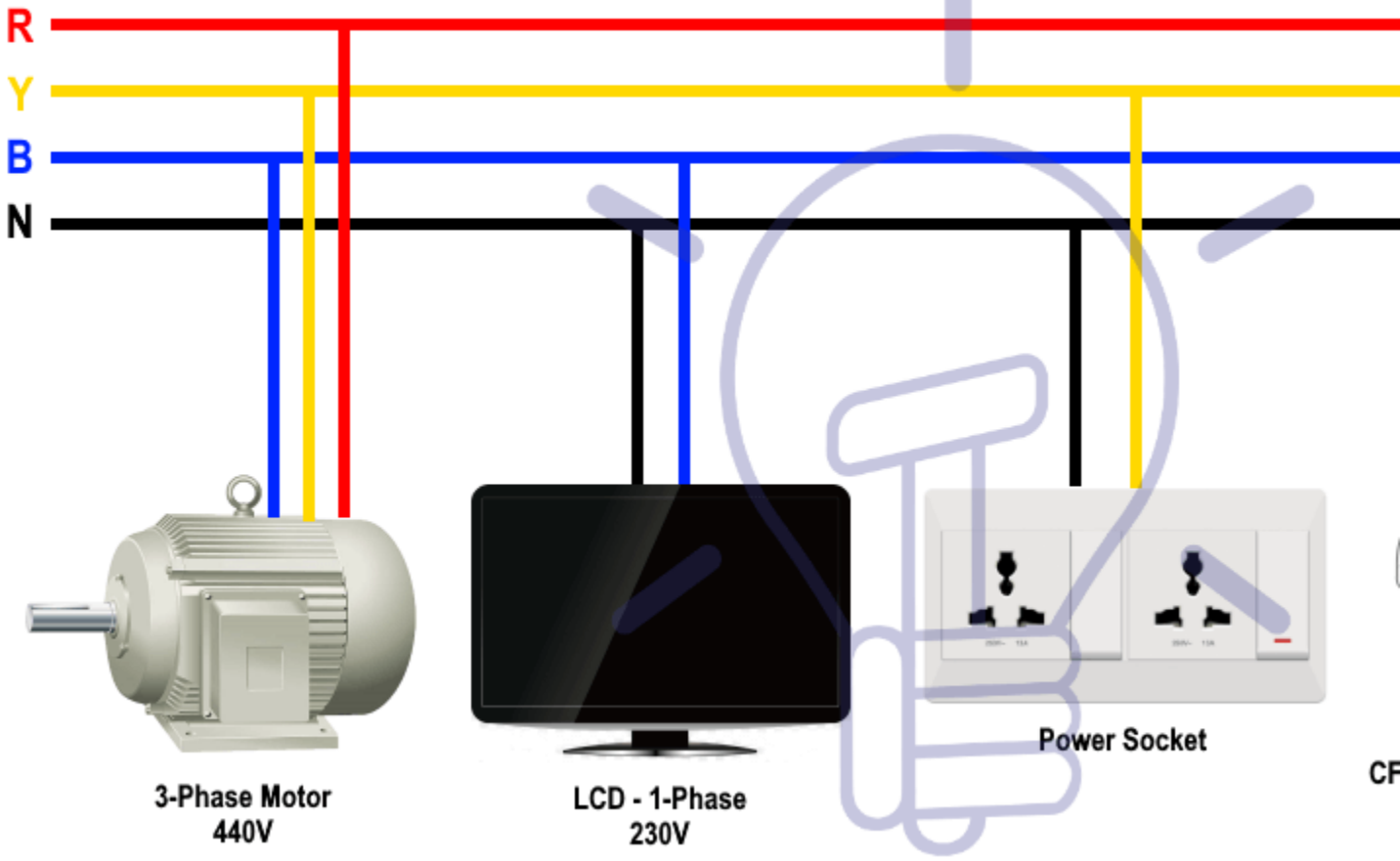

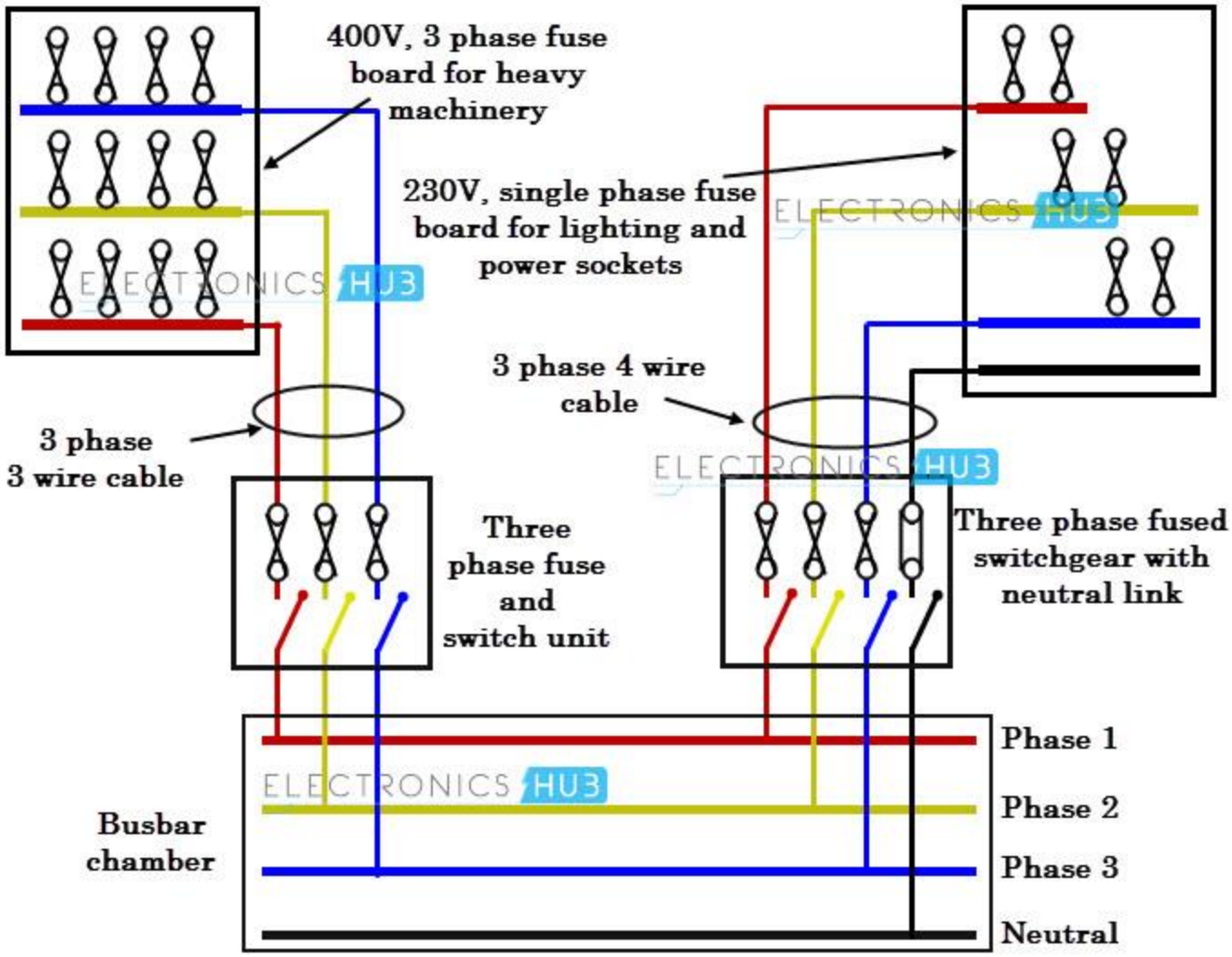
400V, 3 phase fuse board for heavy machinery
230V, single phase fuse board for lighting and power sockets
3 phase 4 wire cable
3 phase 3 wire cable
Three phase fuse and switch unit
Three phase fused switchgear with neutral link
Busbar chamber
Phase 1
Phase 2
Phase 3
Neutral
ELECTRONICS HUB

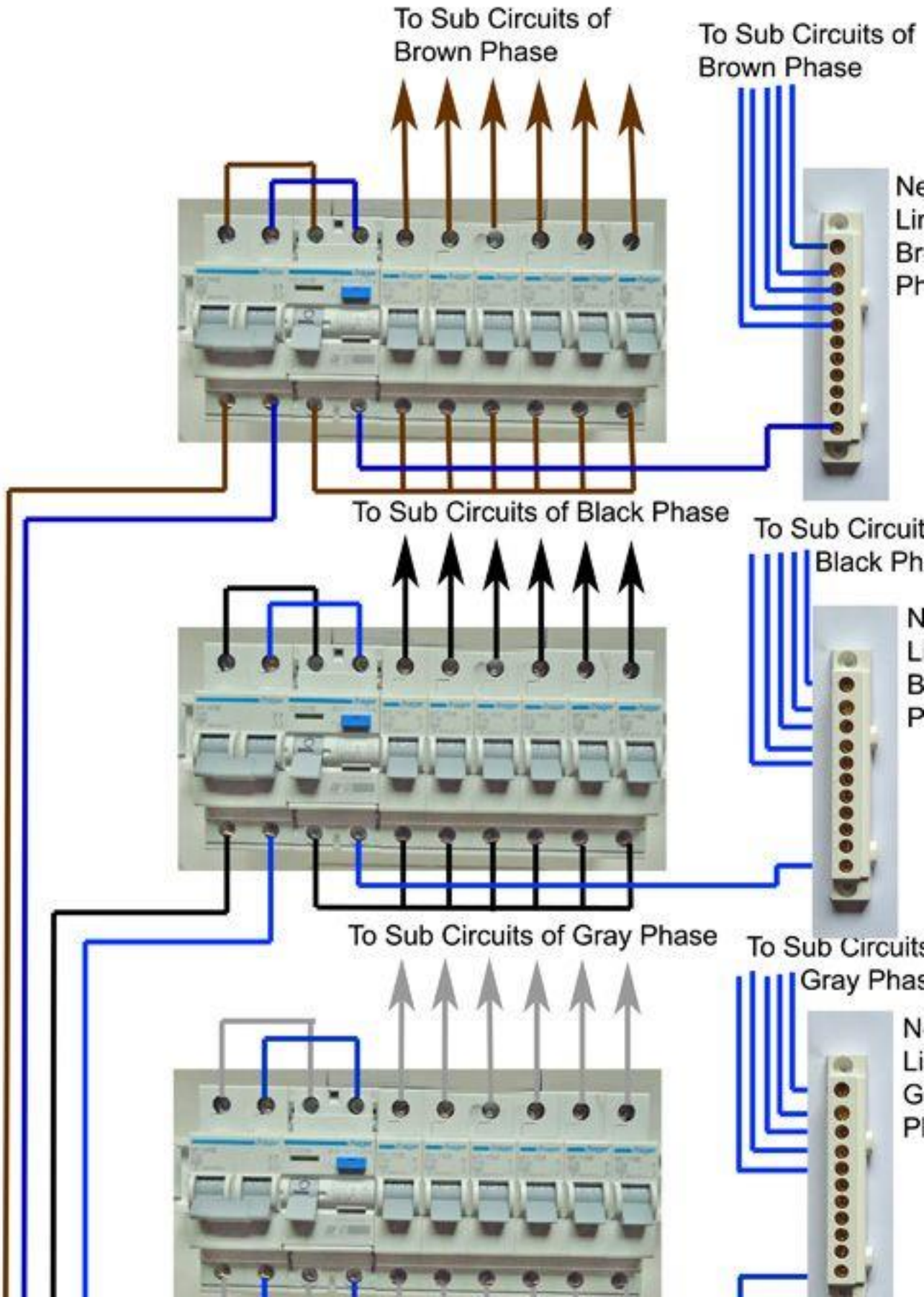
To Sub Circuits of
Brown Phase
To Sub Circuits of
Brown Phase
To Sub Circuits of Black Phase
To Sub Circuits of Gray Phase

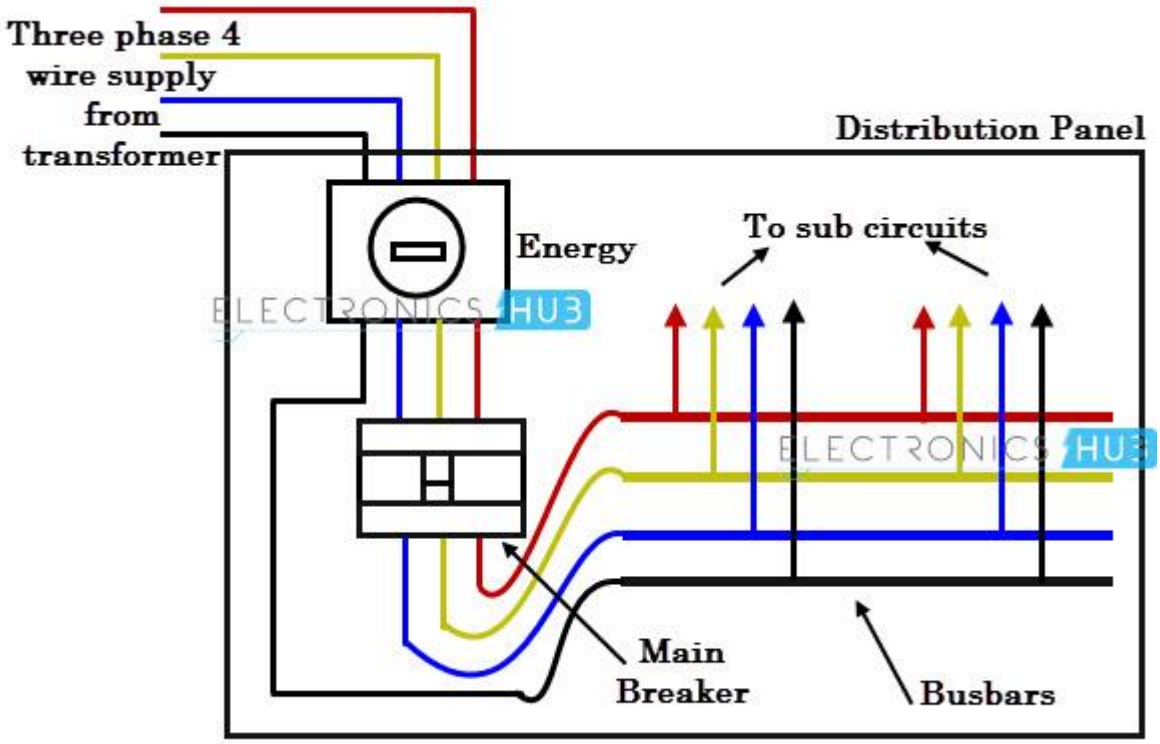
Three phase 4
wire supply
from
transformer
Distribution Panel
Energy
To sub circuits
Main
Breaker
Busbars

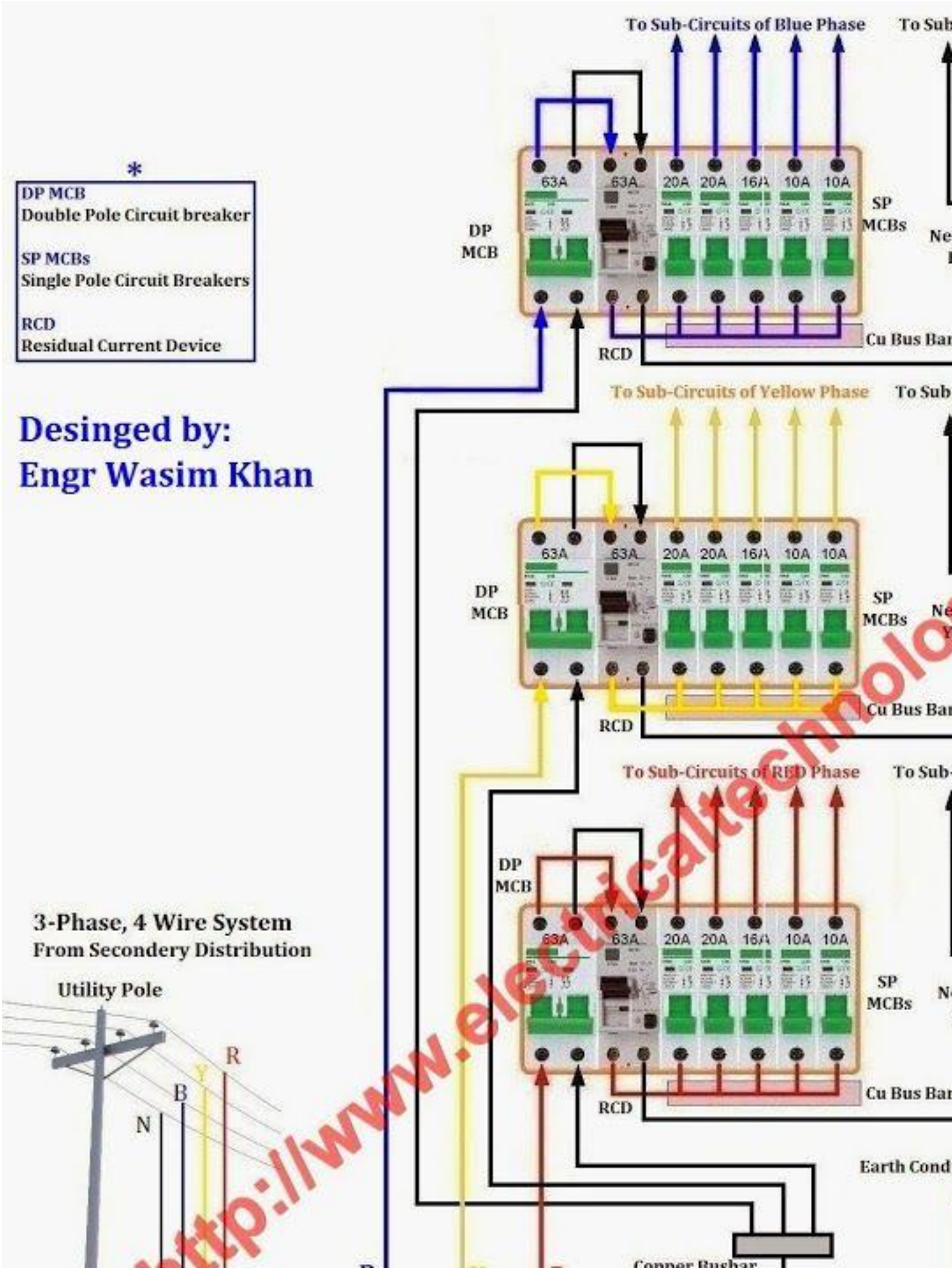

http://www.electricaltechnolo